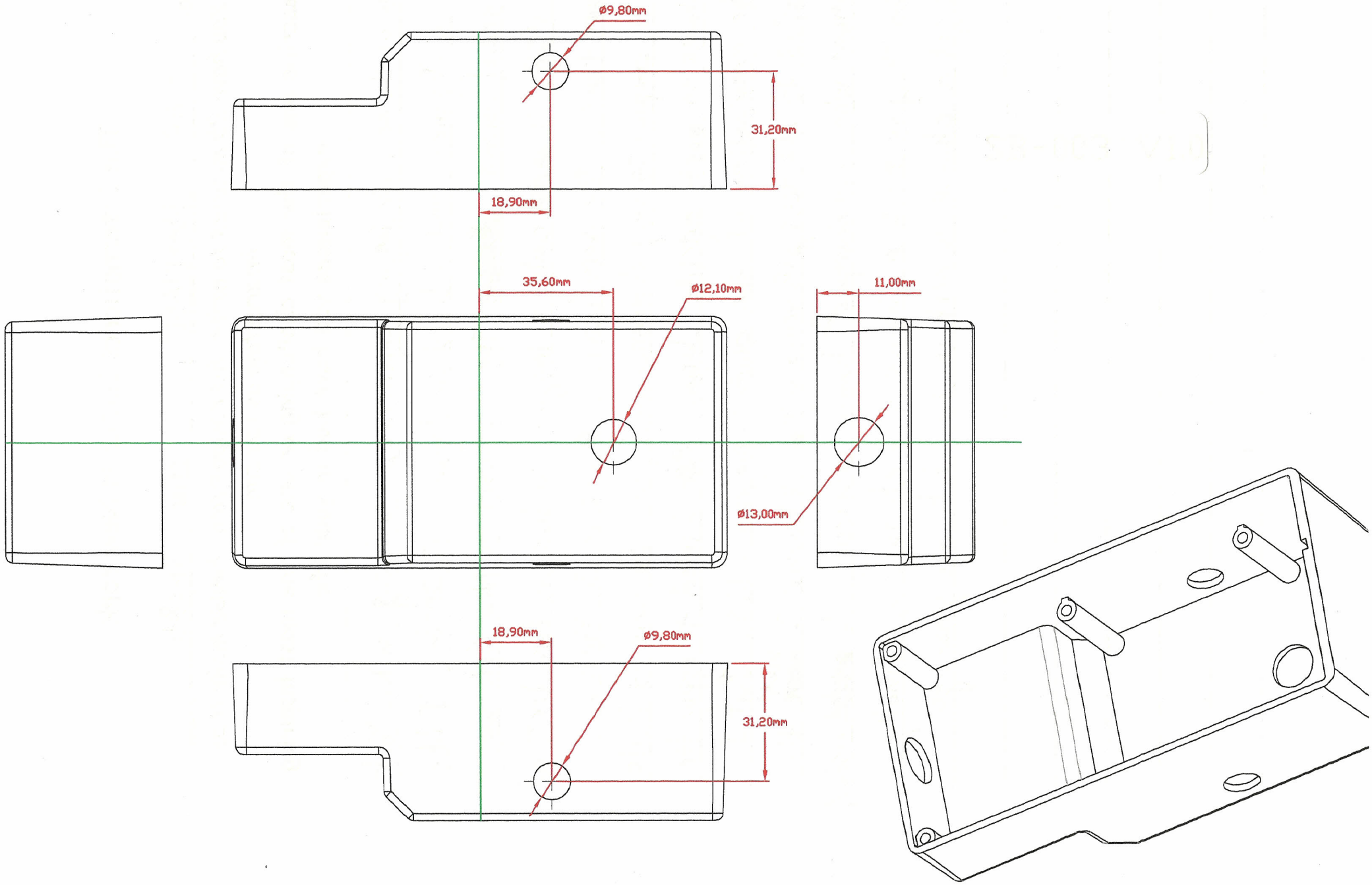
ø9,80mm
31,20mm
18,90mm
35,60mm
ø12,10mm
11,00mm
ø13,00mm
18,90mm
ø9,80mm
31,20mm